Radio Telescope Fundamentals - Single-element Telescopes (single dish, filled aperture)

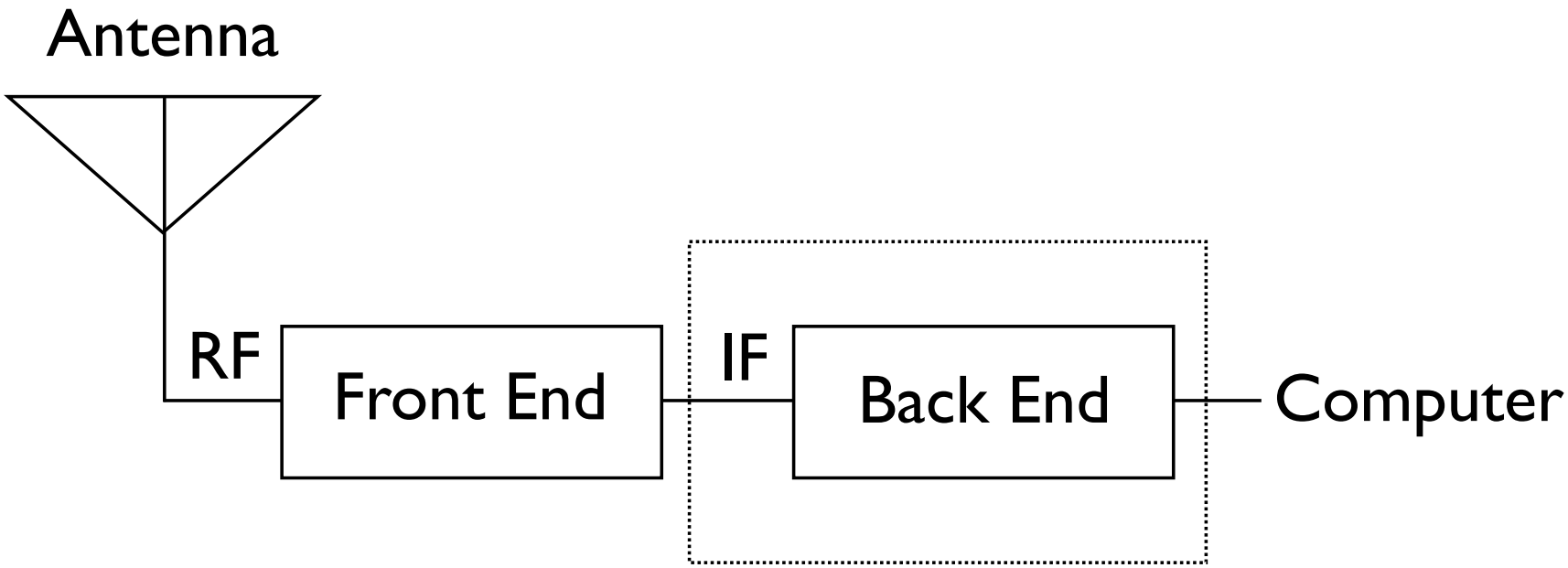

JCMT

Arecibo

GBT

Antenna Theory

- EM electrodynamic potential

$$\nabla \cdot B = 0$$
$$\Downarrow$$
$$B = \nabla \times A$$

$$\begin{aligned} \nabla \times (E + \frac{1}{c}\dot{A}) &= 0 \\ &\Downarrow \\ E + \frac{1}{c}\dot{A} &= -\nabla\Phi \\ &\Downarrow \\ E &= -\nabla\Phi - \frac{1}{c}\dot{A} \end{aligned}$$

$$\{E, H\} \rightarrow \{A, \Phi\}$$

Lorentz gauge

$$\begin{aligned} A' &= A + \nabla\Lambda \\ \Phi' &= \Phi - \frac{1}{c}\dot{\Lambda} \end{aligned} \quad \Rightarrow \nabla \cdot A + \frac{\epsilon\mu}{c}\dot{\Phi} = 0$$

$$\begin{aligned} \nabla^2 A - \frac{\epsilon\mu}{c^2}\ddot{A} &= -\frac{4\pi}{c}\mu J \\ \nabla^2 \Phi - \frac{\epsilon\mu}{c^2}\ddot{\Phi} &= -\frac{4\pi}{\epsilon}\rho \end{aligned}$$

Antenna Theory

- Green's function and retarded potentials

$$\nabla^2\psi - \frac{1}{\upsilon^2}\ddot{\psi} = -f(x,t)$$

$$\begin{aligned}\psi(x,t) &= \int_{-\infty}^{\infty}\Psi(x,\omega)e^{i\omega t}d\omega \\ f(x,t) &= \int_{-\infty}^{\infty}F(x,\omega)e^{i\omega t}d\omega\end{aligned} \quad \Rightarrow (\nabla^2+k^2)\Psi(x,\omega) = -F(x,\omega)$$

$$(\nabla^2+k^2)G(x,x') = -\delta(x-x') \Rightarrow \quad \begin{aligned}\Psi(x,\omega) &= \int F(x',\omega)G(x-x')d^3x' \\ F(x,\omega) &= \int F(x',\omega)\delta(x-x')d^3x'\end{aligned}$$

$$g(x,t,x',t') = \frac{1}{2\pi}\int G(x,x')e^{i\omega t}d\omega \Rightarrow (\nabla^2 - \frac{1}{\upsilon^2}\frac{\partial^2}{\partial t^2})g(x,x',t,t') = -\delta(x-x')\delta(t-t')$$

spherical coord. $G(x,t) = \frac{1}{4\pi r}e^{\pm ikr} \Rightarrow g(x,t,x',t') = \frac{\delta(t' + \frac{|x-x'|}{\upsilon} - t)}{4\pi|x-x'|}$

Antenna Theory

- Green's function and retarded potentials

$$\psi(x,t) = \frac{1}{4\pi}\int \frac{f(x', t - \frac{|x-x'|}{v})}{|x-x'|} d^3x'$$

$$\Downarrow$$

$$\begin{aligned} A(x,t) &= \frac{\mu}{c}\int \frac{J(x', t - \frac{|x-x'|}{v})}{|x-x'|} d^3x' \\ \Phi(x,t) &= \frac{1}{\varepsilon}\int \frac{\rho(x', t - \frac{|x-x'|}{v})}{|x-x'|} d^3x' \end{aligned}$$

Antenna Theory

- The Hertz dipole

$$\hat{J} = \hat{J}_0 e^{i\omega t} = \frac{I}{a} e^{i\omega t}\hat{z} \qquad A_\rho = 0, A_\phi = 0, A_z = \frac{\mu}{c}\frac{I\Delta l}{r} e^{-i(\omega t - \frac{2\pi}{\lambda} r)}$$

in cylindrical coord.

$$H_\rho = 0, H_\phi = -i\frac{I\Delta l}{2\lambda}\frac{sin\theta}{r}[1 - \frac{1}{i\frac{2\pi}{\lambda}r}]e^{-i(\omega t - \frac{2\pi}{\lambda} r)}, H_z = 0$$

in spherical coord.

$$E_r = i\frac{I\Delta l}{2\lambda}\frac{2cos\theta}{r}\left[\frac{1}{i\frac{2\pi}{\lambda}r} - \frac{1}{(i\frac{2\pi}{\lambda}r)^2}\right]e^{-i(\omega t - \frac{2\pi}{\lambda} r)}, E_\theta = -i\frac{I\Delta l}{2\lambda}\frac{2cos\theta}{r}\left[1 - \frac{1}{i\frac{2\pi}{\lambda}r} + \frac{1}{(i\frac{2\pi}{\lambda}r)^2}\right]e^{-i(\omega t - \frac{2\pi}{\lambda} r)}, E_\phi = 0$$

far field

$$|\langle S\rangle| = \frac{c}{4\pi}|Re(E \times H^*)| = \frac{c}{4\pi}(\frac{I\Delta l}{2\lambda})^2\frac{sin^2\theta}{r^2}$$

$$P = \int |\langle S\rangle| r^2 sin\theta d\theta d\phi = \frac{2c}{3}(\frac{I\Delta l}{2\lambda})^2$$

Antenna Theory

- The reciprocity theorem
  - Two (no ohmic loss) antennas A1, A2 and non-directional medium

$$U_2 I_1 = U_1 I_2$$

  - Thus, the properties of an antenna will be the same no matter if it is transmitting or receiving

Antenna Theory

- antenna parameters
  - power pattern

$$|\langle S \rangle| = P(\theta, \phi)$$

c.f. Hertz dipole

$$|\langle S \rangle| \equiv P(\theta, \phi) = S_0 sin^2\theta$$

$$P_n(\theta, \phi) = \frac{1}{P_{max}} P(\theta, \phi)$$

$$P_n(\theta, \phi) = sin^2\theta$$

$$G(\theta, \phi) = \frac{4\pi P(\theta, \phi)}{\int\int P(\theta, \phi) d\Omega}$$

$$G(\theta, \phi) = \frac{3}{2} sin^2\theta$$

Antenna Theory

- antenna parameters (in general, draw figure)

  beam solid angle

$$\Omega_A = \int P_n(\theta,\phi)d\Omega = \int\int P_n(\theta,\phi)sin\theta d\theta d\phi$$

  main beam solid angle

$$\Omega_{MB} = \int_{main\ lobe} P_n(\theta,\phi)d\Omega$$

  main beam efficiency

$$\eta_B = \frac{\Omega_{MB}}{\Omega_A}$$

  directivity

$$D = G_{max} = \frac{4\pi}{\Omega_A}$$

HPBW (half power beam width), FWHP(full width half power), FWHM (full width half maximum)
BWFN (beam width between first nulls)
EWMB (equivalent width of the main beam)

Antenna Theory

- antenna parameters

  geometric aperture

$$A_g$$

  effective aperture

$$A_e = \frac{P_e}{|\langle S \rangle|}$$

  aperture efficiency

$$\eta_A = \frac{A_e}{A_g}$$

  effective aperture and directivity

$$D = G_{max} = \frac{4\pi A_e}{\lambda^2}$$

Antenna Temperature

$$W = \frac{1}{2} A_e \int B_\nu(\theta, \phi) P_n(\theta, \phi) d\Omega \equiv k T_A$$

$$T_A(\theta, \phi) \equiv \frac{\int T_b(\theta', \phi') P_n(\theta' - \theta, \phi' - \phi) d\Omega'}{\int P(\theta', \phi') d\Omega'}$$

Solutions from the Wave Equation

$$A(x,t) = \frac{\mu}{c}\int \frac{J(x',t-\frac{|x-x'|}{\upsilon})}{|x-x'|}d^3x'$$

if $\quad J(x,t) = J(x)e^{-i\omega t}$

$$A(x,t) = A(x)e^{-i\omega t}$$

$$A(x) = \frac{\mu}{c}\int J(x)\frac{e^{ik|x-x'|}}{|x-x'|}d^3x'$$

Fraunhofer approximation:
far from the antenna and and small antenna size

$$|x-x'| \approx r - n\cdot x' \ , \ r = |x|, r \gg n\cdot x'$$

$$A(x) = \frac{\mu}{c}\frac{e^{ikr}}{r}\int J(x')^{-ikn\cdot x'}d^3x'$$

Aperture Illumination and Antenna Pattern

- A 2D case with approximation

last time in spherical coord. far field

$$E_r = i\frac{I\Delta l}{2\lambda}\frac{2cos\theta}{r}\left[\boxed{\frac{1}{i\frac{2\pi}{\lambda}r}-\frac{1}{(i\frac{2\pi}{\lambda}r)^2}}\right]e^{-i(\omega t-\frac{2\pi}{\lambda}r)}, E_\theta = -i\frac{I\Delta l}{2\lambda}\frac{2cos\theta}{r}\left[1\boxed{-\frac{1}{i\frac{2\pi}{\lambda}r}+\frac{1}{(i\frac{2\pi}{\lambda}r)^2}}\right]e^{-i(\omega t-\frac{2\pi}{\lambda}r)}, E_\phi = 0$$

$$k(nx') = \frac{2\pi}{\lambda}(n\cdot x') \geq 1$$

$$dE = -\frac{i}{2}\lambda J_0 g(x')\frac{F_e(n)}{|x-x'|}e^{-i(\omega t-k|x-x'|)}\frac{dx'}{d\lambda}\frac{dy'}{d\lambda}$$

$$E = -\frac{i}{2}\lambda J_0\frac{F_e(n)}{r}e^{-i(\omega t-kr)}\int\int g(x')e^{-ikn\cdot x'}\frac{dx'}{d\lambda}\frac{dy}{d\lambda}$$

$$= -i\lambda J_0\pi\frac{F_e(n)}{r}f(n)e^{-i(\omega t-kr)}$$

$$f(n) = \frac{1}{2\pi}\int\int g(x')e^{-ikn\cdot x'}\frac{dx'}{\lambda}\frac{dy'}{\lambda}$$

$$P_n(n) = \frac{P(n)}{P_{max}} = \frac{|E\cdot E^*|}{|E\cdot E^*|_{max}} = \frac{|f(n)|^2}{|f_{max}|^2}$$

Aperture Illumination and Antenna Pattern

- A special case (squire aperture)

$$g(x,y)=1\ for|x| \le \frac{L_x}{2},\ |y| \le \frac{L_y}{2}$$
$$g(x,y)=0\ elsewhere$$

$$f(l,m)=\frac{1}{2\pi}\int_{-\infty}^{\infty}\int_{\infty}^{\infty} g(x',y')e^{-i\frac{2\pi}{\lambda}(lx'+my')}\frac{dx'}{\lambda}\frac{dy'}{\lambda}$$
$$=\frac{sin(\pi l L_x/\lambda)}{\pi l L_x/\lambda}\frac{sin(\pi m L_y/\lambda)}{\pi m L_y/\lambda}$$

$$P_n(l,m)=\left[\frac{sin(\pi l L_x/\lambda)}{\pi l L_x/\lambda}\frac{sin(\pi m L_y/\lambda)}{\pi m L_y/\lambda}\right]^2$$

BWFNx $=\frac{\lambda}{L_x}$

HPBWx $=0.88\frac{\lambda}{L_x}$

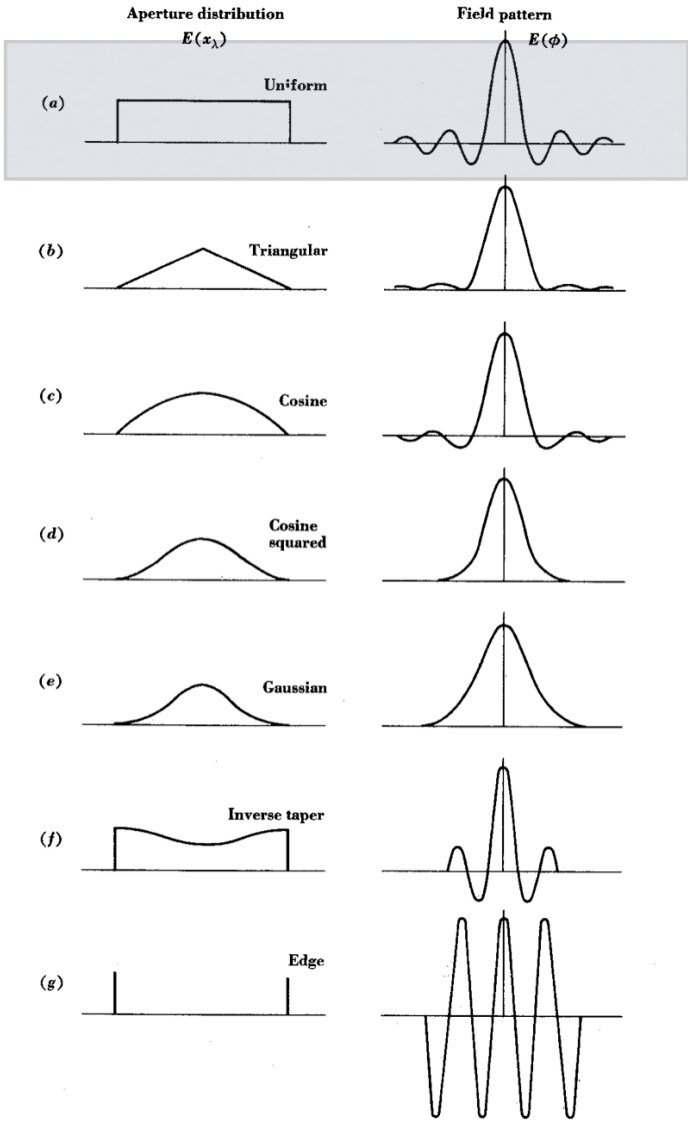

Aperture Illumination and Antenna Pattern

- Another special case (circular aperture)

$$x = \lambda\rho cos\phi$$
$$y = \lambda\rho sin\phi$$
$$u = sin\theta$$
$$f(u) = \frac{1}{2\pi}\int_0^{2\pi}\int_0^{\infty} g(\rho)e^{-2\pi u\rho cos\phi}\rho d\rho d\phi$$
$$= \int_0^{\infty} g(\rho)J_0(2\pi u\rho)\rho d\rho$$
$$Pn(u) = \left[\frac{\int_0^{\infty} g(\rho)J_0(2\pi u\rho)\rho d\rho}{\int_0^{\infty} g(\rho)\rho d\rho}\right]^2$$

if uniform illumination

$$g(\rho) = 1 for \rho \leq D/2\lambda$$
$$g(\rho) = 0 elsewhere$$

$$Pn(u) = \left[\frac{2J_1(\pi uD/\lambda)}{\pi uD/\lambda}\right]^2$$
$$= \Lambda_1^2(\pi uD/\lambda)$$

BWFN $= 2.44\frac{\lambda}{D}$ rad

HPBW $= 1.02\frac{\lambda}{D}$ rad

Aperture Illumination and Antenna Pattern

- surface accuracy - phase errors
  - linear phase error - axis tilt
  - quadratic phase error - defocusing
  - random phase error - reduction of directive gain

$$G = \frac{4\pi}{\lambda^2} \frac{|\int g_0(x) e^{-i[kn\cdot x - \delta(x)]} d^2x|^2}{\int g_0^2(x) d^2x}$$

- in the simplified case when phase error is small and the average phase error can be made to 0

$$\frac{G}{G_0} = 1 - \bar{\delta^2} \qquad \bar{\delta^2} = \frac{\int g_0(x)\delta^2(x) d^2x}{\int g_0(x) d^2x}$$

Practical Construction Consideration

- mostly mechanical properties
  - deformation - gravity, thermal, wind, etc
    - surface accuracy measurements
      - fiducial mark surveying
      - holography (artificial/celestial source)
    - pointing/focusing - mount
      - quatorial
        - simple design
        - only useful for small aperature
      - alt-az
        - complicated control
        - constant gravity angle
        - difficult zenith tracking
        - change of position angle
      - optical or radio measurements
  - feedleg blockage - standing waves

Practical Construction Consideration

- overcome mechanical difficulties
  - backup structure and surface (wires/solid panel)
    - reduce gravity deformation
      - motion restricted - Arecibo
      - rigid design
      - passive compensation (homologous deformation)
        - parabolic shape maintained
        - apex, focal point, axis changed
        - applicable for all radio wavelengths (OVRO...)
      - active compensation (GBT)
    - reduce thermal/wind deformation
      - shielding dorm (CSO,JCMT, ARO 10m/12m)
      - improved material (SMA, APEX)
  - feedleg blockage
    - off-axis design (GBT)

Back Ends

- continuum
- spectrometers
  - analog
    - Michelson interferometer
    - Fourier transform spectrometer (FTS)
    - Fabry-Perot spectrometer
    - Multichannel Filter Spectrometer (Filter Bank)
    - AOS
    - CTS
  - digital
    - digitization and FFT
    - (auto)correlator
  - advantages of (ditigal) correlator over analog systems
    - flexibility
    - stability

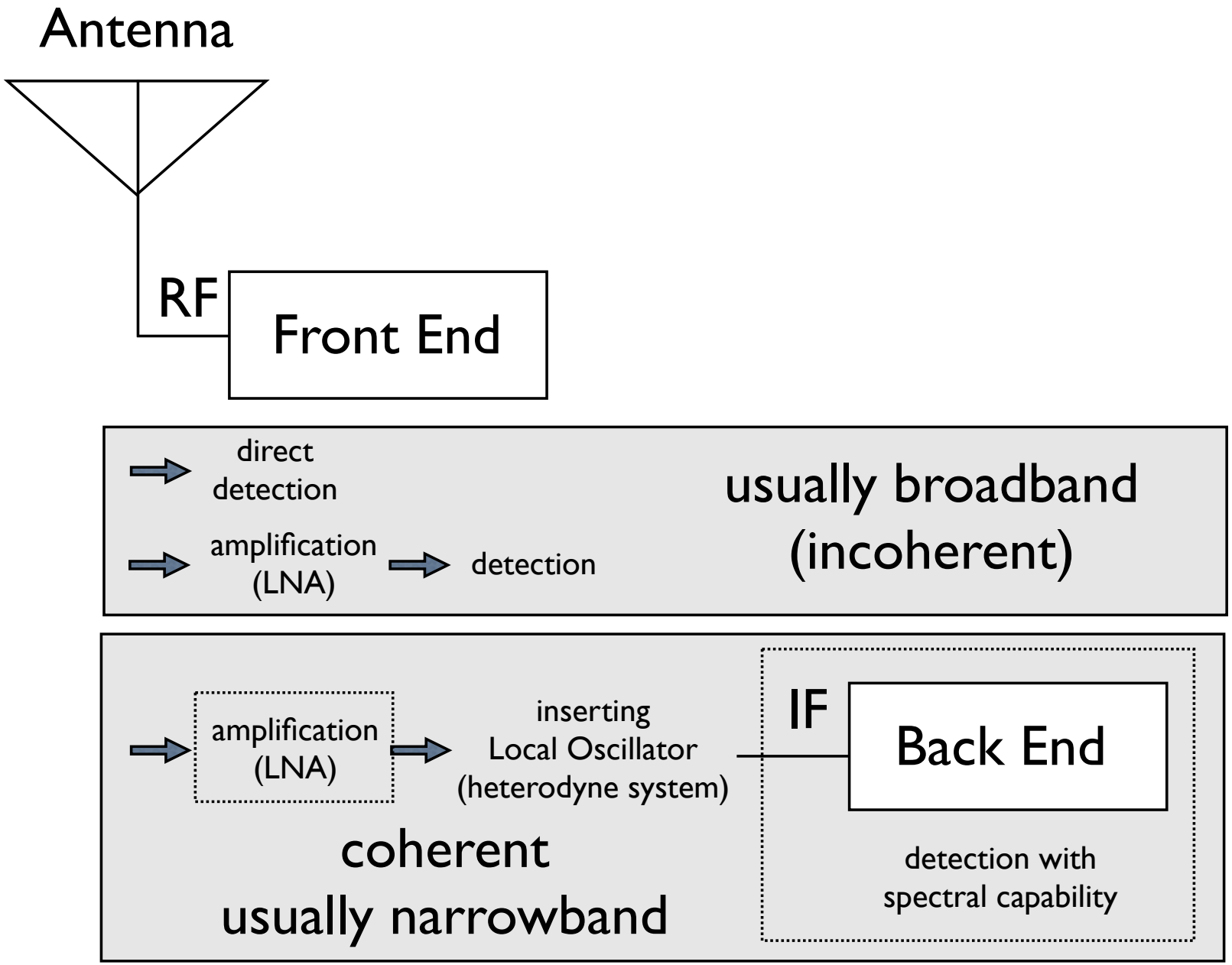
Antenna
RF
Front End
direct
detection
amplification
(LNA)
detection
usually broadband
(incoherent)
amplification
(LNA)
inserting
Local Oscillator
(heterodyne system)
IF
Back End
coherent
usually narrowband
detection with
spectral capability

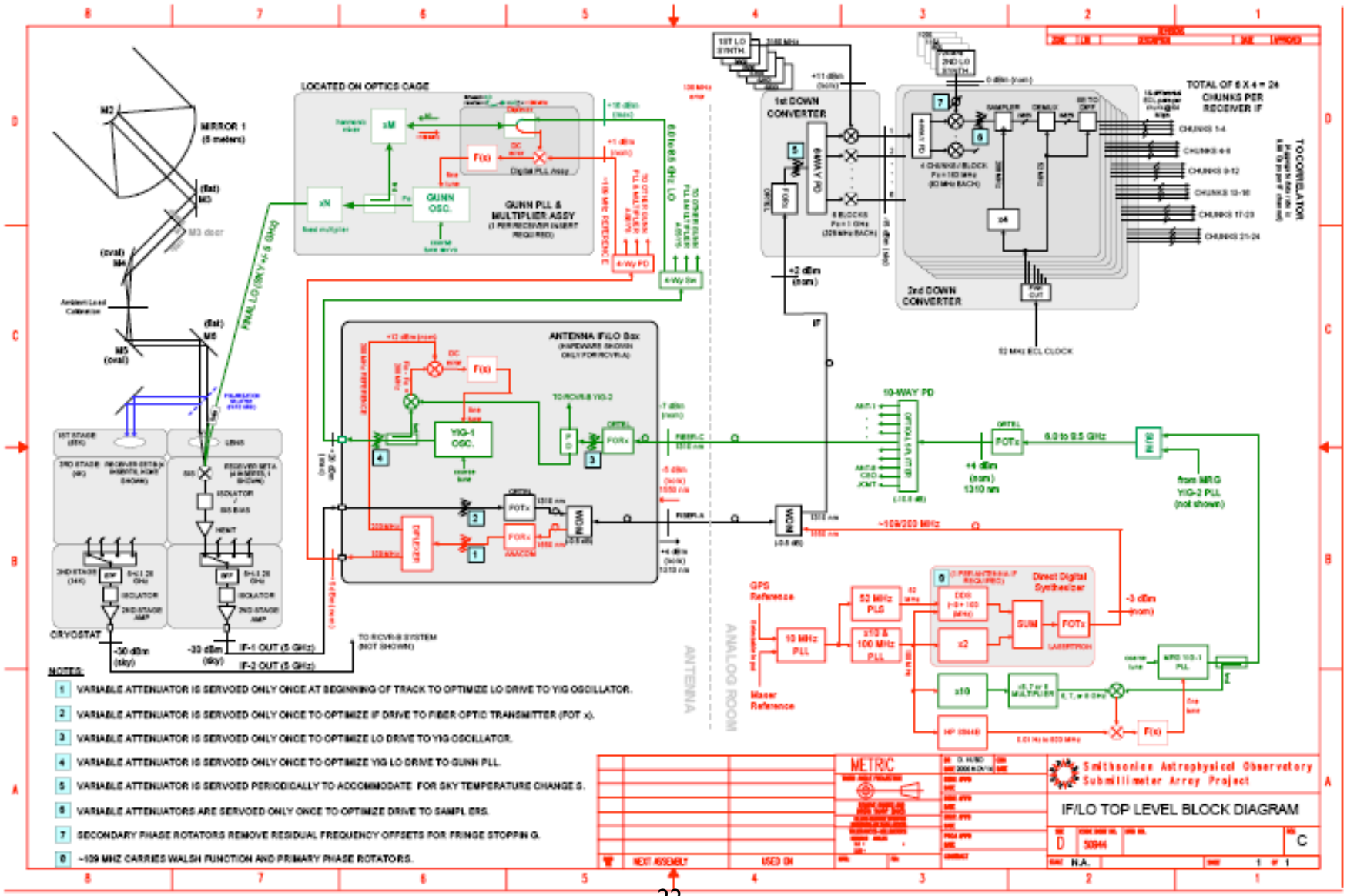
LOCATED ON OPTICS CAGE
MIRROR 1 (5 meters)
GUNN PLL & MULTIPLIER ASSY
ANTENNA IF/LO Box
1st DOWN CONVERTER
2nd DOWN CONVERTER
TOTAL OF 6 X 4 = 24 CHUNKS PER RECEIVER IF
TO CORRELATOR
10-WAY PD
52 MHz ECL CLOCK
CRYOSTAT
GPS Reference
Maser Reference
Direct Digital Synthesizer
ANTENNA
ANALOG ROOM
IF-1 OUT (5 GHz)
IF-2 OUT (5 GHz)
NOTES:
1 VARIABLE ATTENUATOR IS SERVOED ONLY ONCE AT BEGINNING OF TRACK TO OPTIMIZE LO DRIVE TO YIG OSCILLATOR.
2 VARIABLE ATTENUATOR IS SERVOED ONLY ONCE TO OPTIMIZE IF DRIVE TO FIBER OPTIC TRANSMITTER (FOT x).
3 VARIABLE ATTENUATOR IS SERVOED ONLY ONCE TO OPTIMIZE LO DRIVE TO YIG OSCILLATOR.
4 VARIABLE ATTENUATOR IS SERVOED ONLY ONCE TO OPTIMIZE YIG LO DRIVE TO GUNN PLL.
5 VARIABLE ATTENUATOR IS SERVOED PERIODICALLY TO ACCOMMODATE FOR SKY TEMPERATURE CHANGES.
6 VARIABLE ATTENUATORS ARE SERVOED ONLY ONCE TO OPTIMIZE DRIVE TO SAMPLERS.
7 SECONDARY PHASE ROTATORS REMOVE RESIDUAL FREQUENCY OFFSETS FOR FRINGE STOPPING.
8 ~109 MHZ CARRIES WALSH FUNCTION AND PRIMARY PHASE ROTATORS.
METRIC
Smithsonian Astrophysical Observatory
Submillimeter Array Project
IF/LO TOP LEVEL BLOCK DIAGRAM
D
50944
C
N.A.
1 OF 1

Homework 3

- 3.1 : Express the Faraday Rotation formula in more sensible units and check the typical values for this effect in a reference (Please cite).

- 3.2 : For the following telescopes at their operation frequencies, at which distances a plane wave approximation can be applied for sources:

  - 1. Arecibo
  - 2. VLA
  - 3. SMA